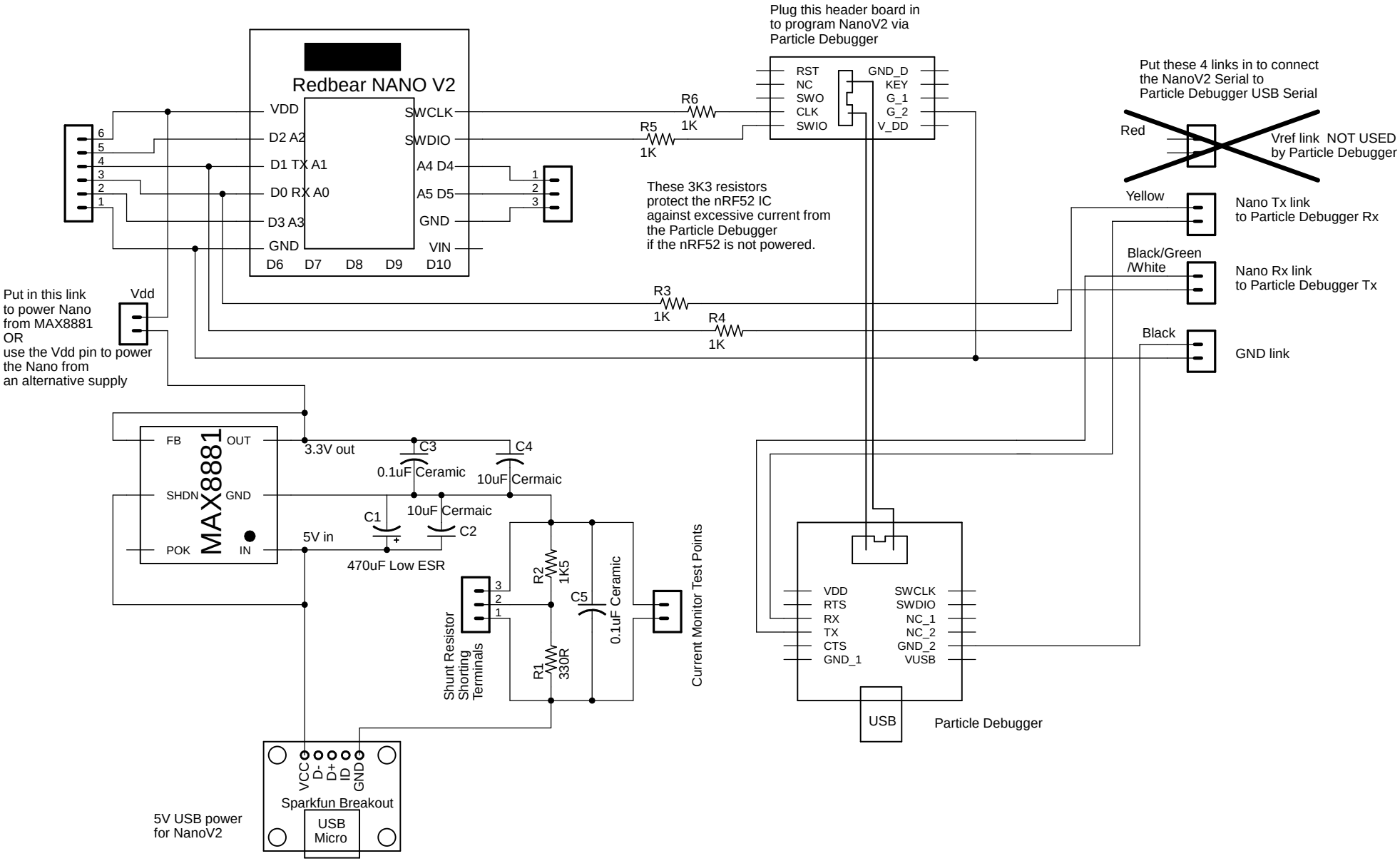
Redbear NANO V2
VDD
D2 A2
D1 TX A1
D0 RX A0
D3 A3
GND
SWCLK
SWDIO
A4 D4
A5 D5
GND
VIN
D6 D7 D8 D9 D10
Plug this header board in to program NanoV2 via Particle Debugger
RST
NC
SWO
CLK
SWIO
GND_D
KEY
G_1
G_2
V_DD
R6 1K
R5 1K
These 3K3 resistors protect the nRF52 IC against excessive current from the Particle Debugger if the nRF52 is not powered.
Put these 4 links in to connect the NanoV2 Serial to Particle Debugger USB Serial
Red
Vref link NOT USED by Particle Debugger
Yellow
Nano Tx link to Particle Debugger Rx
Black/Green /White
Nano Rx link to Particle Debugger Tx
Black
GND link
R3 1K
R4 1K
Put in this link to power Nano from MAX8881 OR use the Vdd pin to power the Nano from an alternative supply
Vdd
MAX8881
FB
OUT
SHDN
GND
POK
IN
3.3V out
5V in
C3 0.1uF Ceramic
C4 10uF Cermaic
C1 470uF Low ESR
C2 10uF Cermaic
R2 1K5
R1 330R
C5 0.1uF Ceramic
Shunt Resistor Shorting Terminals
Current Monitor Test Points
VDD
RTS
RX
TX
CTS
GND_1
SWCLK
SWDIO
NC_1
NC_2
GND_2
VUSB
USB
Particle Debugger
VCC
D-
D+
ID
GND
Sparkfun Breakout
USB Micro
5V USB power for NanoV2