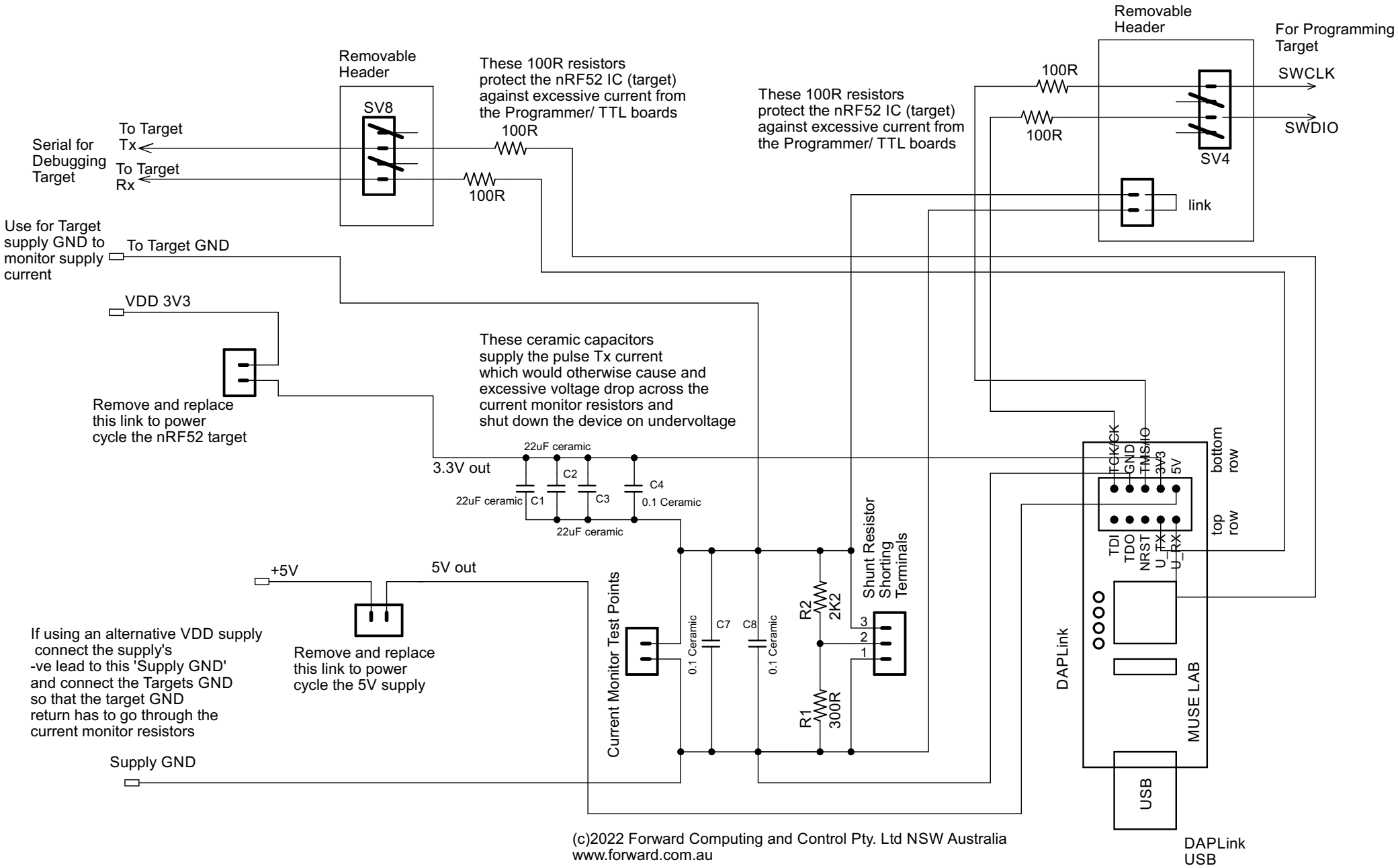

(c)2022 Forward Computing and Control Pty. Ltd NSW Australia
www.forward.com.au