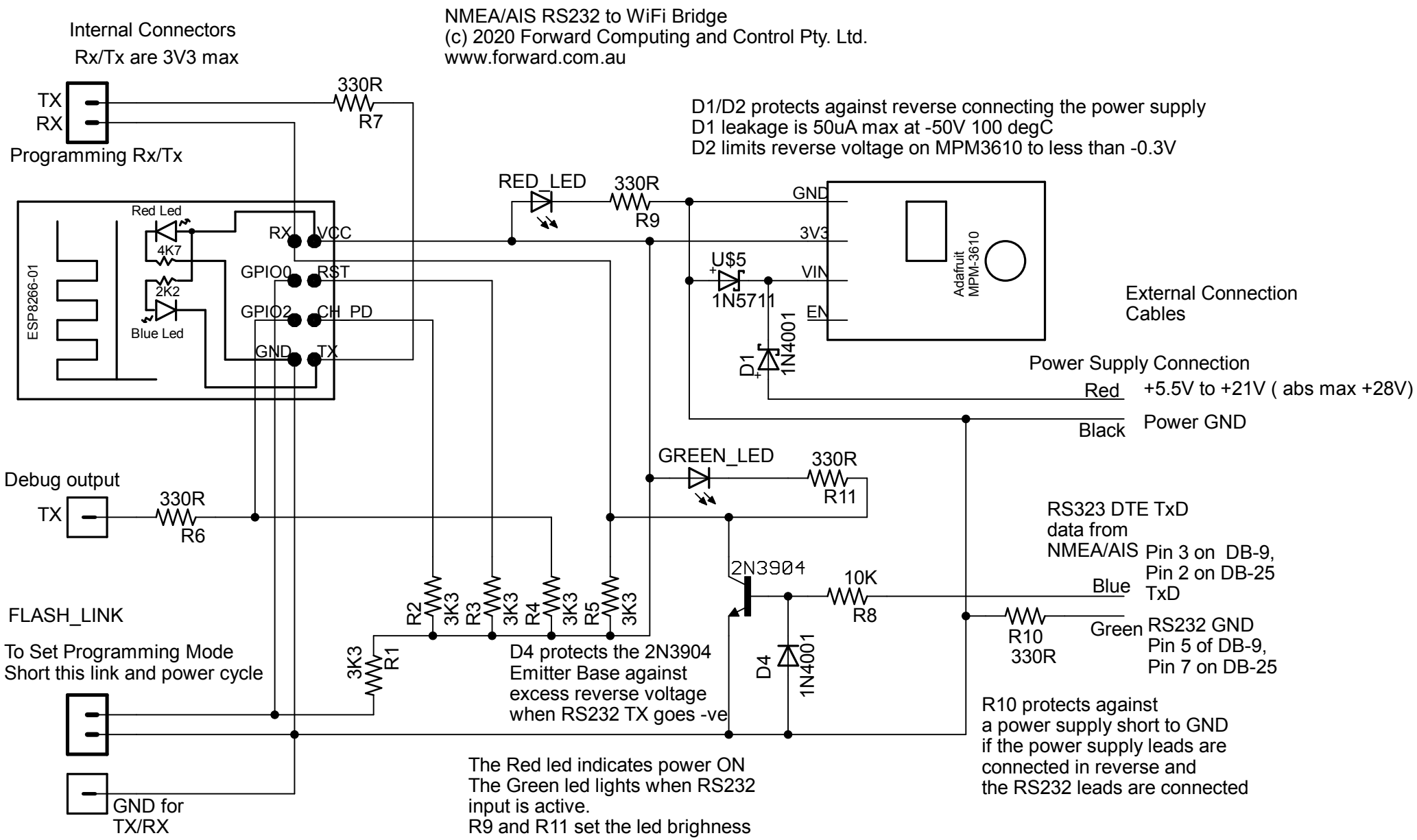
NMEA/AIS RS232 to WiFi Bridge
(c) 2020 Forward Computing and Control Pty. Ltd.
www.forward.com.au
Internal Connectors
Rx/Tx are 3V3 max
TX
RX
Programming Rx/Tx
330R
R7
D1/D2 protects against reverse connecting the power supply
D1 leakage is 50uA max at -50V 100 degC
D2 limits reverse voltage on MPM3610 to less than -0.3V
RED_LED
330R
R9
GND
3V3
VIN
EN
Adafruit
MPM-3610
U$5
1N5711
D1
1N4001
External Connection
Cables
Red Led
4K7
2K2
Blue Led
ESP8266-01
RX
VCC
GPIO0
RST
GPIO2
CH_PD
GND
TX
Power Supply Connection
Red
+5.5V to +21V (abs max +28V)
Black
Power GND
GREEN_LED
330R
R11
Debug output
TX
330R
R6
RS323 DTE TxD
data from
NMEA/AIS
Pin 3 on DB-9,
Pin 2 on DB-25
TxD
Blue
2N3904
10K
R8
R2
3K3
R3
3K3
R4
3K3
R5
3K3
FLASH_LINK
To Set Programming Mode
Short this link and power cycle
3K3
R1
D4 protects the 2N3904
Emitter Base against
excess reverse voltage
when RS232 TX goes -ve
D4
1N4001
R10
330R
Green
RS232 GND
Pin 5 of DB-9,
Pin 7 on DB-25
R10 protects against
a power supply short to GND
if the power supply leads are
connected in reverse and
the RS232 leads are connected
GND for
TX/RX
The Red led indicates power ON
The Green led lights when RS232
input is active.
R9 and R11 set the led brighness