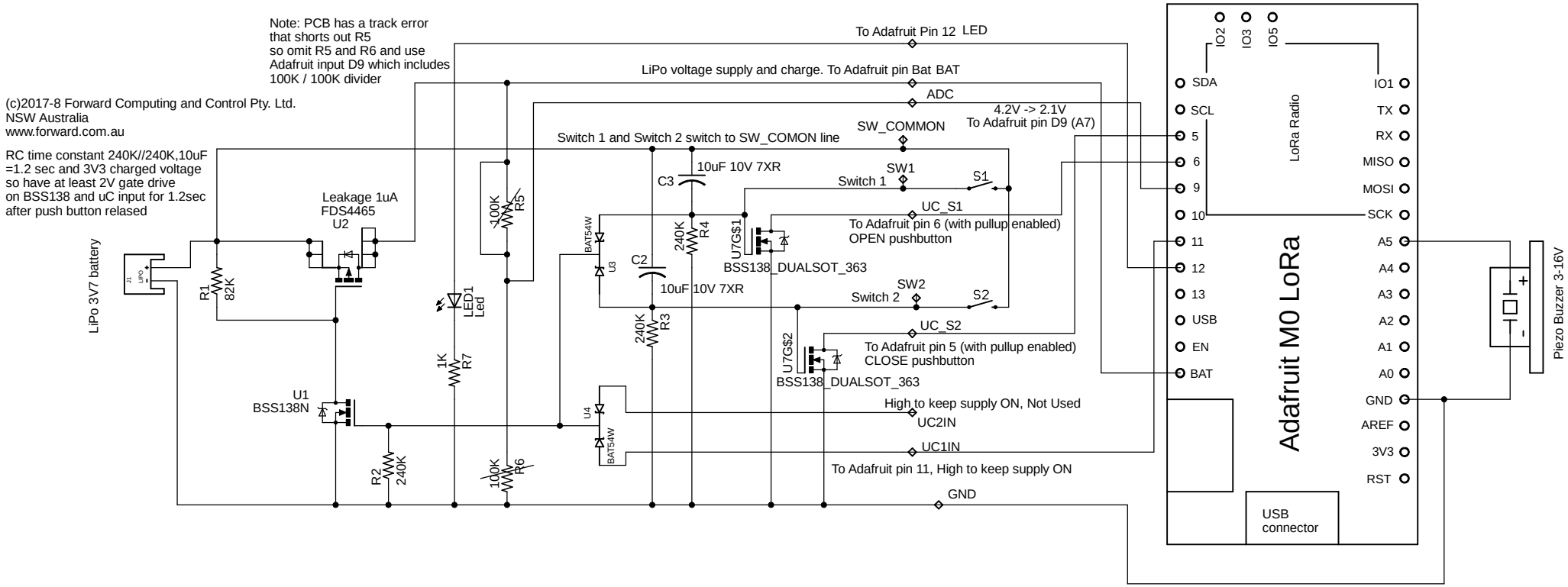
Note: PCB has a track error
that shorts out R5
so omit R5 and R6 and use
Adafruit input D9 which includes
100K / 100K divider
(c)2017-8 Forward Computing and Control Pty. Ltd.
NSW Australia
www.forward.com.au
RC time constant 240K//240K,10uF
=1.2 sec and 3V3 charged voltage
so have at least 2V gate drive
on BSS138 and uC input for 1.2sec
after push button relased
LiPo 3V7 battery
J1
R1
82K
Leakage 1uA
FDS4465
U2
U1
BSS138N
R2
240K
1K
R7
LED1
Led
100K
R5
100K
R6
To Adafruit Pin 12 LED
LiPo voltage supply and charge. To Adafruit pin Bat BAT
ADC
4.2V -> 2.1V
To Adafruit pin D9 (A7)
SW_COMMON
Switch 1 and Switch 2 switch to SW_COMON line
C3
10uF 10V 7XR
SW1
Switch 1
S1
UC_S1
To Adafruit pin 6 (with pullup enabled)
OPEN pushbutton
BAT54W
U3
C2
10uF 10V 7XR
240K
R4
U7G$1
BSS138_DUALSOT_363
SW2
Switch 2
S2
UC_S2
To Adafruit pin 5 (with pullup enabled)
CLOSE pushbutton
240K
R3
U7G$2
BSS138_DUALSOT_363
U4
BAT54W
High to keep supply ON, Not Used
UC2IN
UC1IN
To Adafruit pin 11, High to keep supply ON
GND
IO2
IO3
IO5
SDA
SCL
5
6
9
10
11
12
13
USB
EN
BAT
LoRa Radio
IO1
TX
RX
MISO
MOSI
SCK
A5
A4
A3
A2
A1
A0
GND
AREF
3V3
RST
Adafruit M0 LoRa
USB
connector
Piezo Buzzer 3-16V
+
-