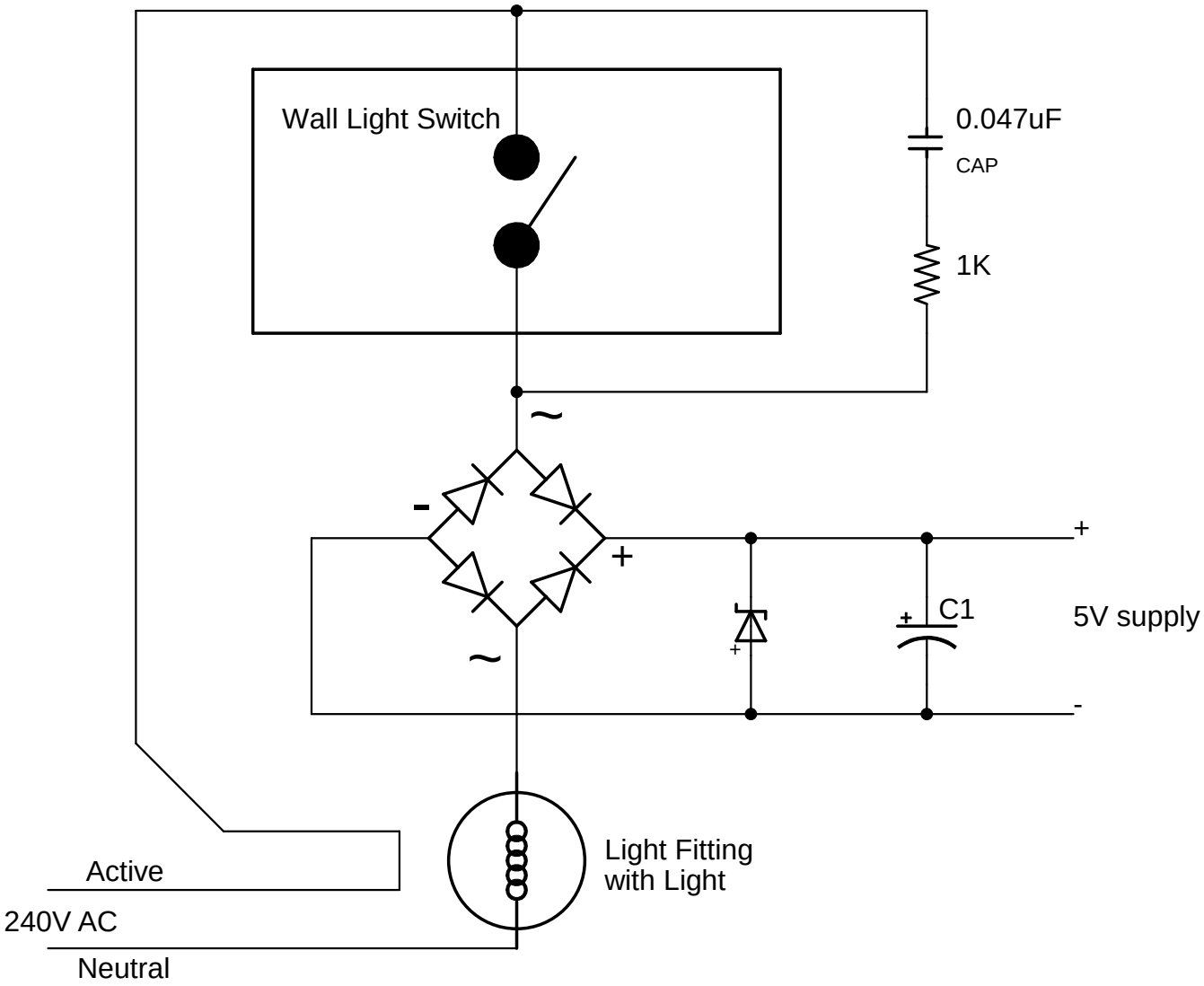
Wall Light Switch
0.047uF
CAP
1K
~
-
+
~
+
C1
5V supply
-
Light Fitting
with Light
Active
240V AC
Neutral